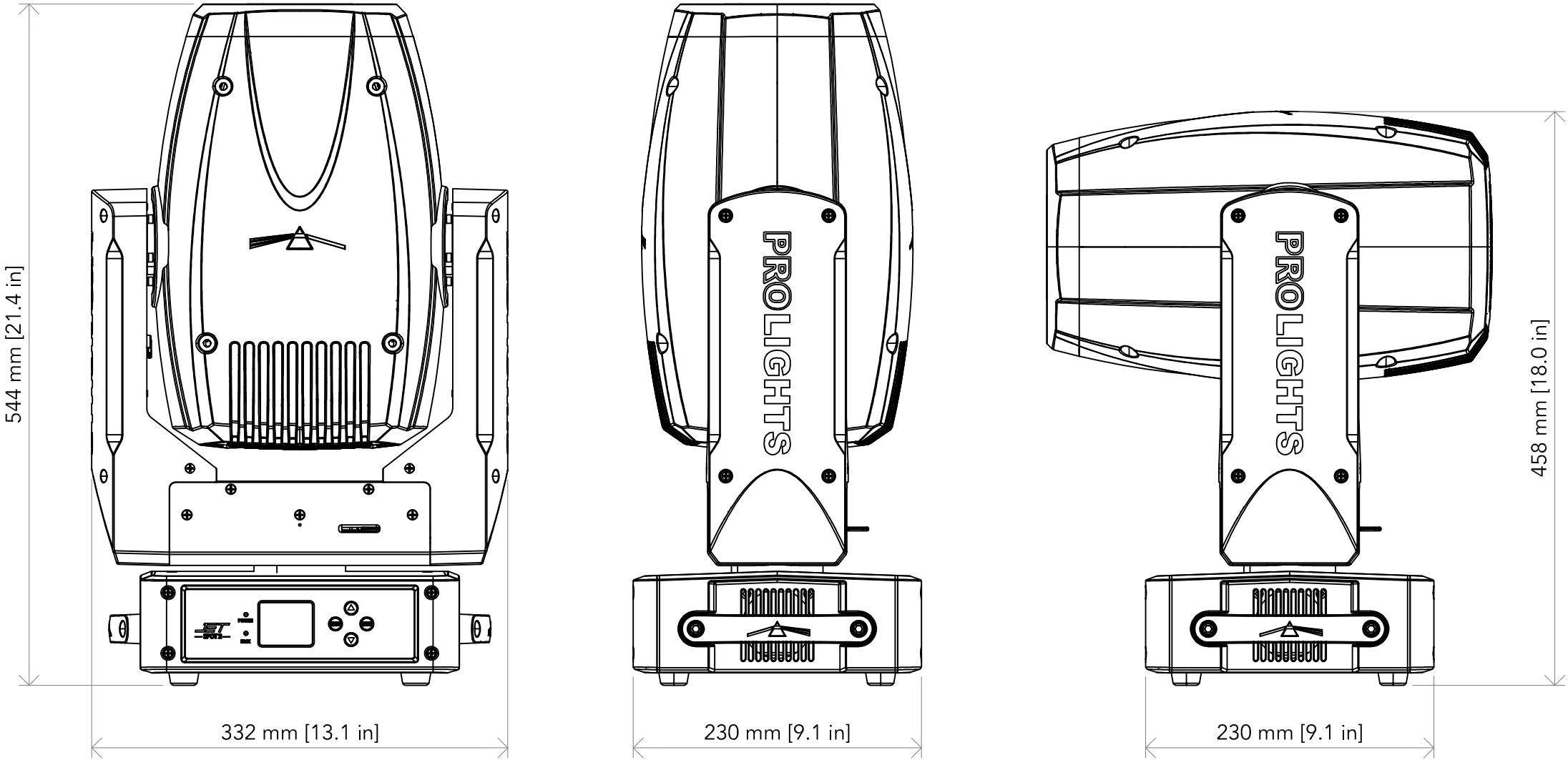
544 mm [21.4 in]
332 mm [13.1 in]
PROLIGHTS
230 mm [9.1 in]
PROLIGHTS
458 mm [18.0 in]
230 mm [9.1 in]